FULLY PRINTABLE

Bastlero
www.bastlero.com
Member of Group
3DLab gang

USER GUIDE

Created for 3D printer

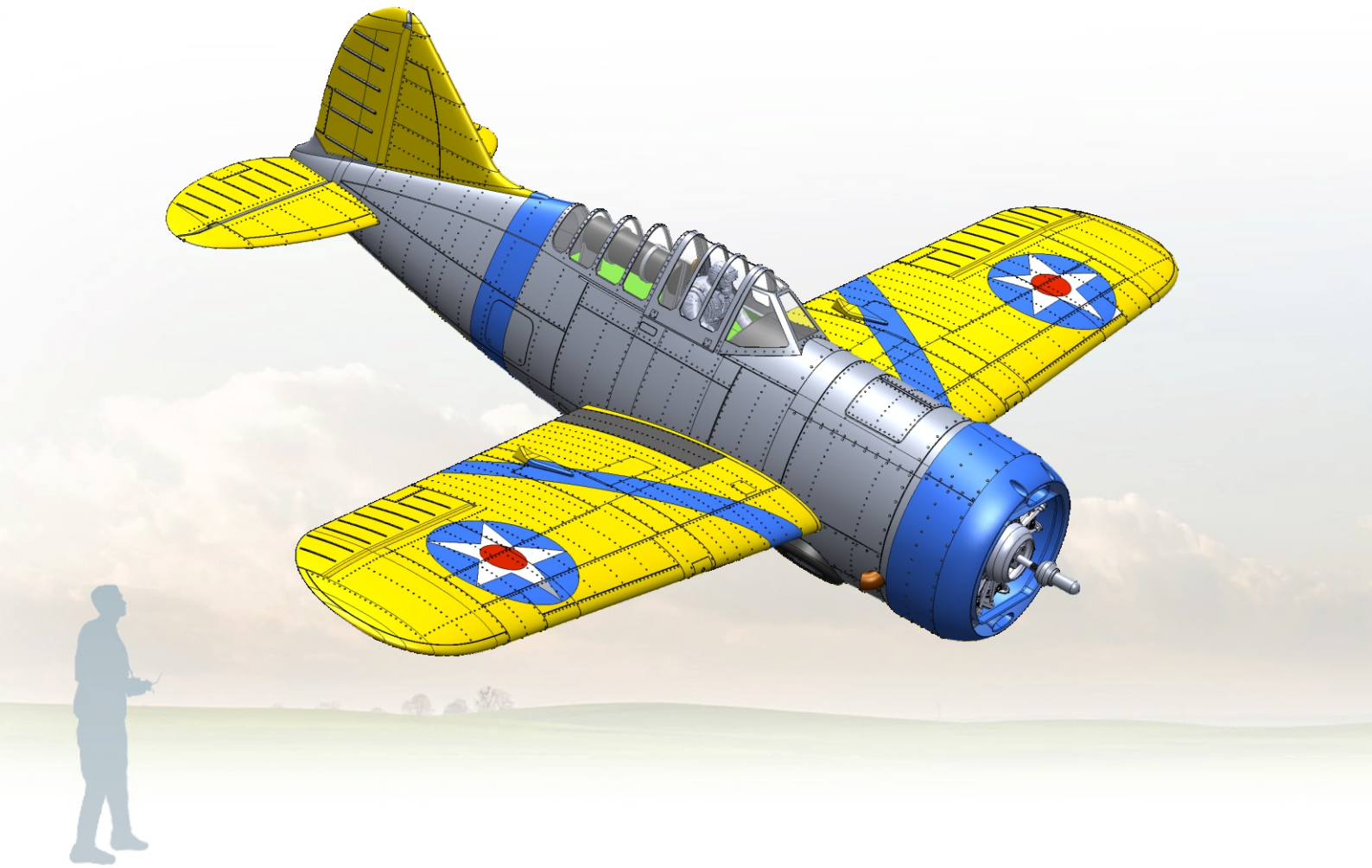

scale	wingspan	made of	printed weight	total weight
1:10	43,3In / 110cm	52 pcs	18oz / 500g	31,8oz / 900g

F2A Buffalo

USAF Fighter

ASSEMBLY INSTRUCTION
RC Model printed on 3D printer

Visit our website, www.bastlero.com, to purchase a product you are interested in. Once you've made your purchase, you will receive access to download the file in

Download the files onto an SD card. We have optimized the universal G-code output to work with a wide selection of printers and have tested our products on several printer brands and configurations. If you own a Prusa 3D printer, please use the Prusa G-code files for printing.

Print all of the model parts on your 3D printer. The minimum supported size of the printed surface should be 22x22x20 cm or 20x25x20 cm.

Assemble the model according to the attached PDF manual. For bonding the model parts, we recommend using Super Glue (medium thickness) and Activator.

PRODUCT CONTAINS

- STL files of an RC model F2A Buffalo at a 1/10 scale for a Prusa 3D printer.
- G-Code for an RC modelF2A Buffalo at a 1/10 scale, optimized for 3D printing.
- PrusaSlicer .3mf files for an RC model F2A Buffalo at a 1/10 scale.
- Asssembly instructions in PDF format
- Scale markings in PDF format

MODEL SPECIFICATION

scale	wingspan	made of	printed weight	takeoff weight
1:10	62In / 110cm	52 pcs	99oz / 0,5kg	123oz / 0,95kg

WATEVER YOU NEED

1. PLA/LPLA & PETG Filaments (Recommended LWPLA 3D LabPrint) Link
2. Super glue and Activator
3. 4X Micro Servos (Recommended Turnigy Tg9d) Link
4. 4X Screw M3 length 15-20 mm & 4X Nut M3
5. 12X screws 2x10mm for mounting servos
6. 8X Magnet diameter 8mm X 1,5 or 2mm Link
7. 6X Magnet diameter 10mm x 1,5 or 2mm Link
8. Electric Motor 3536- 910KV (Recommended PROPDRIVE v2 3536 910KV) Link
9. Speed Controllers 40-50A (Recommended Red Brick 50A) Link
10. Radio / Receaver 8 Chanels
11. Propeller 13X5 or 12x6 Link
12. Metal Wire 0,7mm-1mm (push-pull servo rod)
13. 2x 30cm Carbon tube diameter 7mm Link
14. Battery 1500-2200mAh Link

PRINTED PARTS LIST

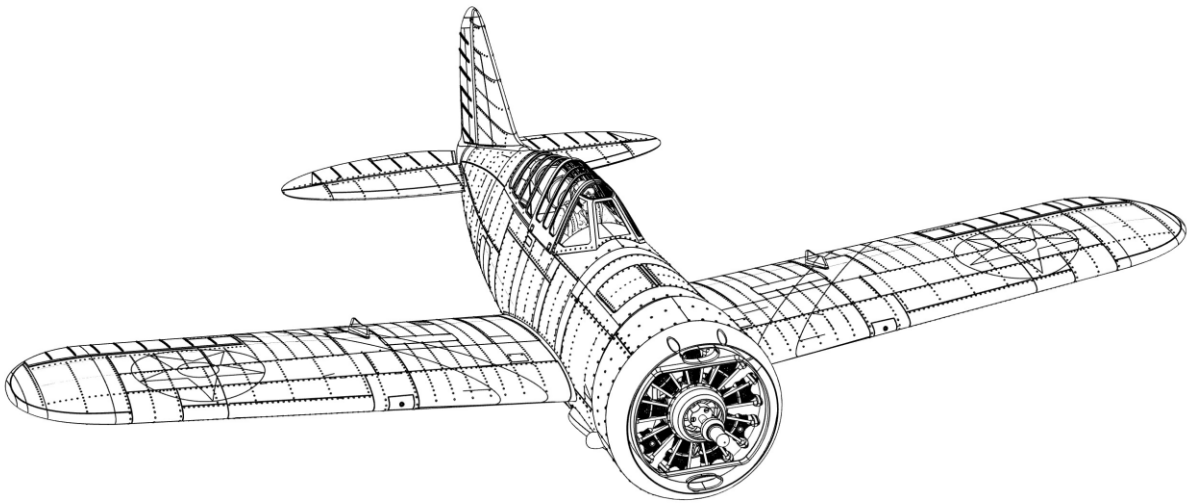

No.	Parts name	Layer H.	Weight	Infil	P. Time	Mtl.	Perime	Main Location
1	Fuselage A	0,25mm	16g	0%	2h52m	LW-PLA	2	Fuselage_01_-_08
2	Fuselage B	0,25mm	94g	2%	14h40m	LW-PLA	2	Fuselage_01_-_08
3	Fuselage C	0,25mm	46g	0%	9h30m	LW-PLA	1	Fuselage_01_-_08
4	Fuselage D	0,25mm	35g	0%	7h11m	LW-PLA	1	Fuselage_01_-_08
5	Fuselage E	0,25mm	34g	0%	7h8m	LW-PLA	1	Fuselage_01_-_08
6	Fuselage F	0,25mm	4g	0%	50m	LW-PLA	1	Fuselage_01_-_08
7	Fuselage G	0,25mm	3g	0%	1h	LW-PLA	1	Fuselage_01_-_08
8	Fuselage H	0,25mm	6g	0%	1h	LW-PLA	1	Fuselage_01_-_08
9	Rudder A	0,25mm	0,5g	0%	4m	LW-PLA	2	Rudder_09_-_13
10	Rudder Horn	0,25mm	1g	15%	13m	PLA	4	Rudder_09_-_13
11	Rudder Hex Axe	0,25mm	1g	15%	5h25m	LW-PLA	4	Rudder_09_-_13
12	Rudder Move A	0,2mm	10g	0%	2h20m	LW-PLA	1	Rudder_09_-_13
13	Rudder Move B	0,25mm	0,3	0%	7m	LW-PLA	2	Rudder_09_-_13

PRINTED

Part List (14-52)

No.	Parts name	Layer H.	Weight	Infil	P. Time	Mtl.	Perime	Main Location
14	Left Elevator A	0,25mm	4,2g	0%	1h33m	LW-PLA	1	Elevator_14_-_24
15	Left Elevator B	0,25mm	1,2g	0%	24m	LW-PLA	2	Elevator_14_-_24
16	Right Elevator A	0,25mm	4,2g	0%	1h33m	LW-PLA	1	Elevator_14_-_24
17	Right Elevator B	0,25mm	1,2g	0%	24m	LW-PLA	2	Elevator_14_-_24
18	Left Elevator Move A	0,2mm	5,9g	0%	2h39m	LW-PLA	1	Elevator_14_-_24
19	Left Elevator Move B	0,2mm	1g	0%	28m	LW-PLA	2	Elevator_14_-_24
20	Right Elevator Move A	0,2mm	5,9g	0%	2h39m	LW-PLA	1	Elevator_14_-_24
21	Right Elevator Move B	0,2mm	1g	0%	28m	LW-PLA	2	Elevator_14_-_24
22	Axe Elevator Right	0,2mm	1,2g	15%	18m	PLA	4	Elevator_14_-_24
23	Axe Elevator Left	0,2mm	0,7g	15%	8m	PLA	4	Elevator_14_-_24
24	Hex Axe Elevator	0,2mm	0,8g	15%	8m	LW-PLA	5	Elevator_14_-_24
25	Electromotor Holder	0,25mm	13g	15%	2h9m	LW-PLA	5	Accessories_25_-_28
26	Battery Cip	0,2mm	6g	15%	47m	PLA	5	Accessories_25_-_28
27	Battery Cover	0,25mm	10,4g	0%	2h21m	LW-PLA	1	Accessories_25_-_28
28	Wright R-1820	0,3mm	13g	5%	2h34m	LW-PLA	2	Accessories_25_-_28
29	Dashboard	0,2mm	2,7g	5%	20m	PLA	2	Cocpit_29_-_36
30	life raft container	0,2mm	9,4g	5%	2h14m	LW-PLA	2	Cocpit_29_-_36
31	Canopy Front Frame	0,2mm	11g	15%	1h42m	PLA	2	Cocpit_29_-_36
32	Canopy Mid Frame	0,2mm	12,7g	15%	1h43m	PLA	2	Cocpit_29_-_36
33	Canopy Back Frame	0,2mm	29g	15%	3h	PLA	2	Cocpit_29_-_36
34	Form on Canopy Front	0,2mm	76g	15%	4h16m	PETG	10	Cocpit_29_-_36
35	Form on Canopy Mid	0,2mm	130g	15%	7h13m	PETG	10	Cocpit_29_-_36
36	Form on Canopy Back	0,2mm	144g	15%	8h13m	PETG	10	Cocpit_29_-_36
37	Wing Left A	0,25mm	27,6g	0%	5h43m	LW-PLA	1	Wing_37_-_52
38	Wing Left B	0,25mm	23g	0%	4h45m	LW-PLA	1	Wing_37_-_52
39	Wing Left C	0,25mm	14,4g	0%	3h3m	LW-PLA	1	Wing_37_-_52
40	Wing Left D	0,25mm	1,5g	0%	31m	LW-PLA	1	Wing_37_-_52
41	Ailerons Left	0,2mm	7g	0%	3h7m	LW-PLA	1	Wing_37_-_52
42	Wing Right A	0,25mm	27,6g	0%	5h43m	LW-PLA	1	Wing_37_-_52
43	Wing Right B	0,25mm	23g	0%	4h45m	LW-PLA	1	Wing_37_-_52
44	Wing Right C	0,25mm	14,4g	0%	3h3m	LW-PLA	1	Wing_37_-_52
45	Wing Right D	0,25mm	1,5g	0%	31m	LW-PLA	1	Wing_37_-_52
46	Ailerons Right	0,2mm	27,6g	0%	5h43m	LW-PLA	1	Wing_37_-_52
47	Ailerons hinge A	0,2mm	0,3g	5%	3m	PLA	4	Wing_37_-_52
48	Ailerons hinge B	0,2mm	0,3g	5%	3m	PLA	4	Wing_37_-_52
49	Wing Accessories A	0,2mm	0,3g	0%	9m	LW-PLA	2	Wing_37_-_52
50	Wing Accessories B	0,2mm	0,3g	0%	8m	LW-PLA	2	Wing_37_-_52
51	Wing Servo Cover Left	0,2mm	2,3g	0%	55m	LW-PLA	2	Wing_37_-_52
52	Wing Servo Cover Right	0,2mm	2,3g	0%	55m	LW-PLA	2	Wing_37_-_52

FUSELAGE

Fuselage Assembly

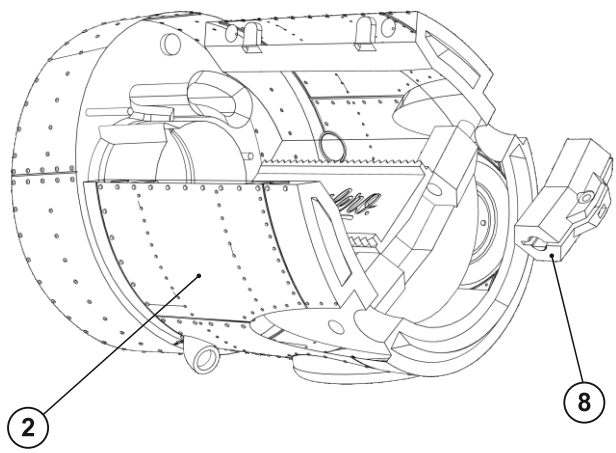

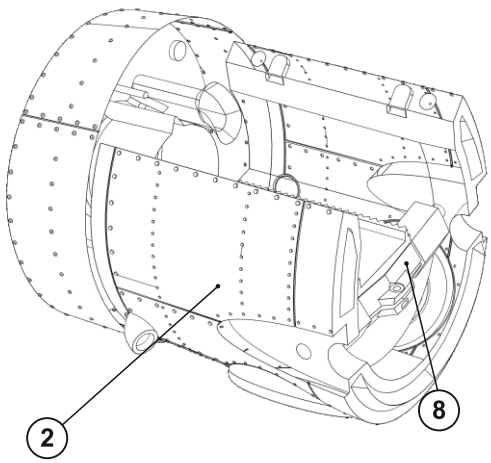

Fuselage Assembly: Start by gluing together the fuselage parts (2-3) using super glue. Continue by inserting part number (8) into the fuselage section (2).
Note: Part number (2) is printed with infill and will have printing imperfections caused by filament retraction. Therefore, pay extra attention to cleaning this part. Before gluing each part together, clean the holes of the

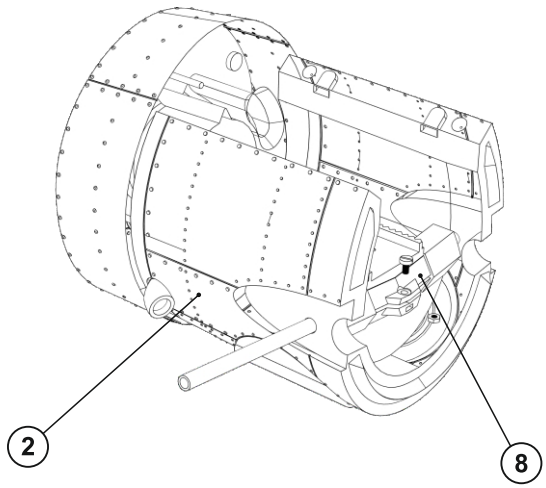

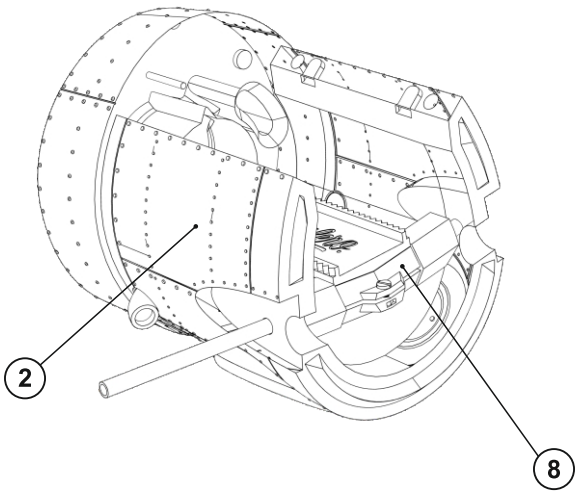

Fuselage Assembly: Make sure you have good clearance for a 7 mm diameter carbon tube, which will serve as the wing spar. If everything fits properly, secure it with glue and insert an M3 screw and nut into part (8). This will be used to attach the wings to the fuselage.

FUSELAGE

Fuselage Assembly - Wing Handlers

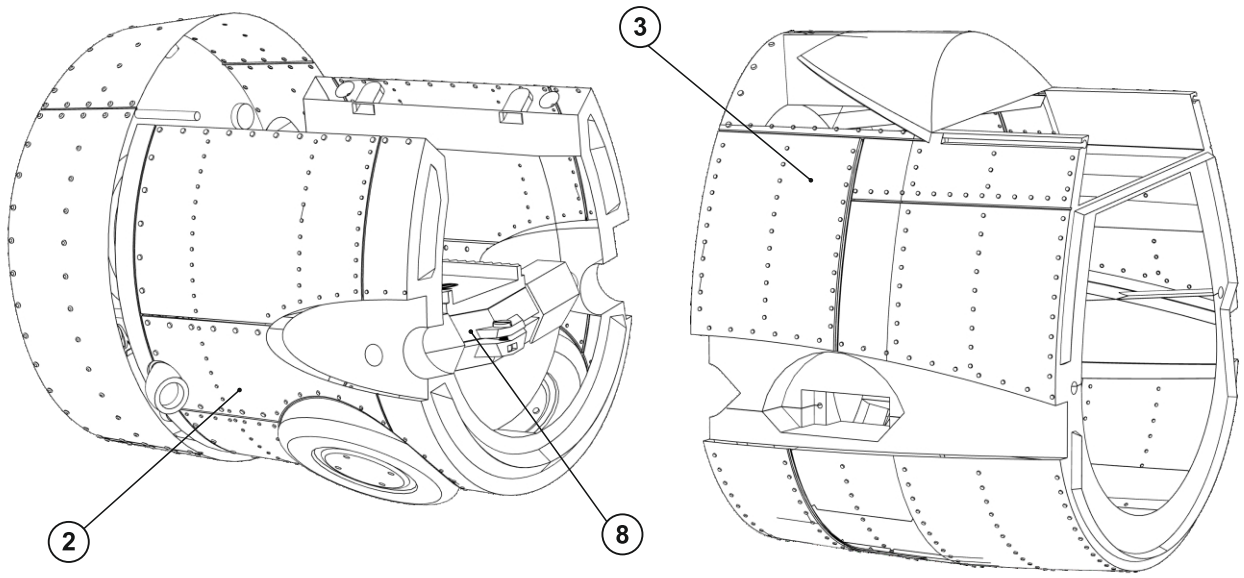

Fuselage Assembly: Continue by joining parts (2 and 3). Before each joining, remember to test-fit the parts without glue and ensure that everything is well cleaned from filament residues. If not, use sandpaper. It is important that the parts fit together well.

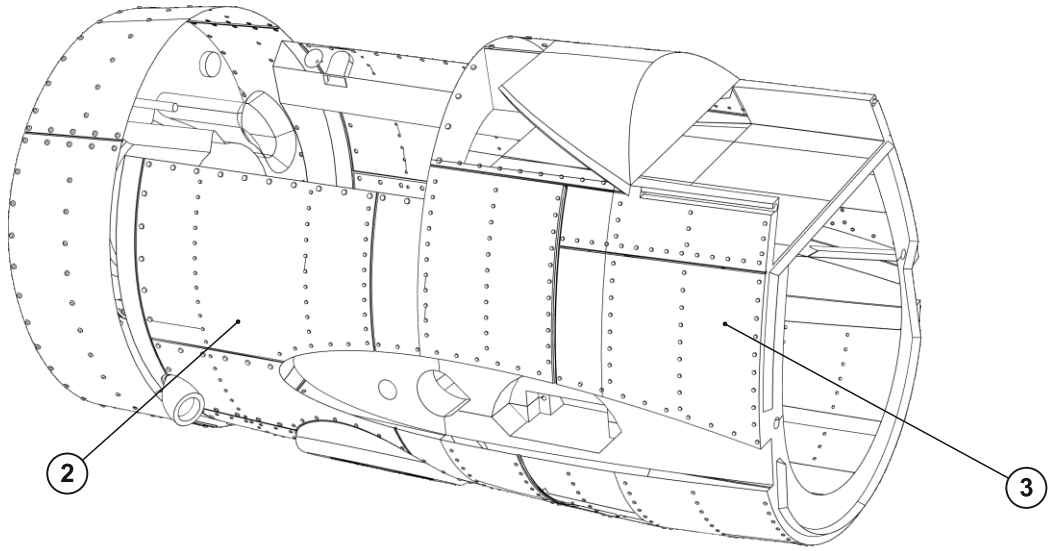

Fuselage Assembly: If everything fits well, use glue and bond the parts.

FUSELAGE

Fuselage Assembly

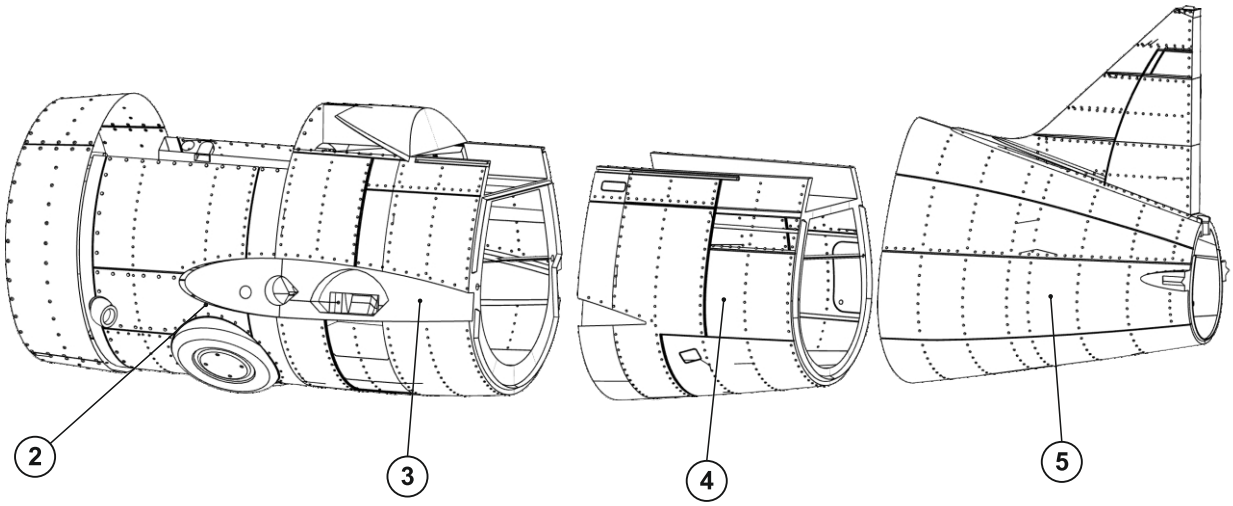

Fuselage Assembly: Proceed in the same manner with parts (4 and 5). Ensure that everything fits and also check the passage of holes for the Bowden cables.

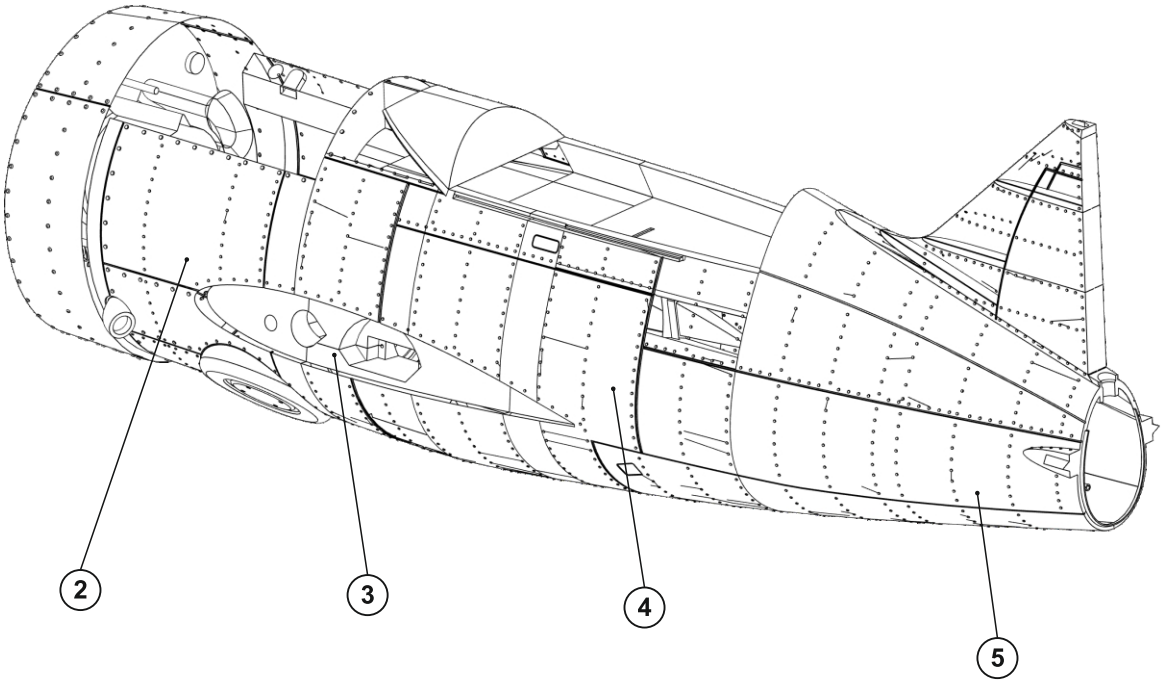

Fuselage Assembly: Glue parts (4 and 5) together once you've confirmed everything fits well.

RUDDER

Fin & Rudder

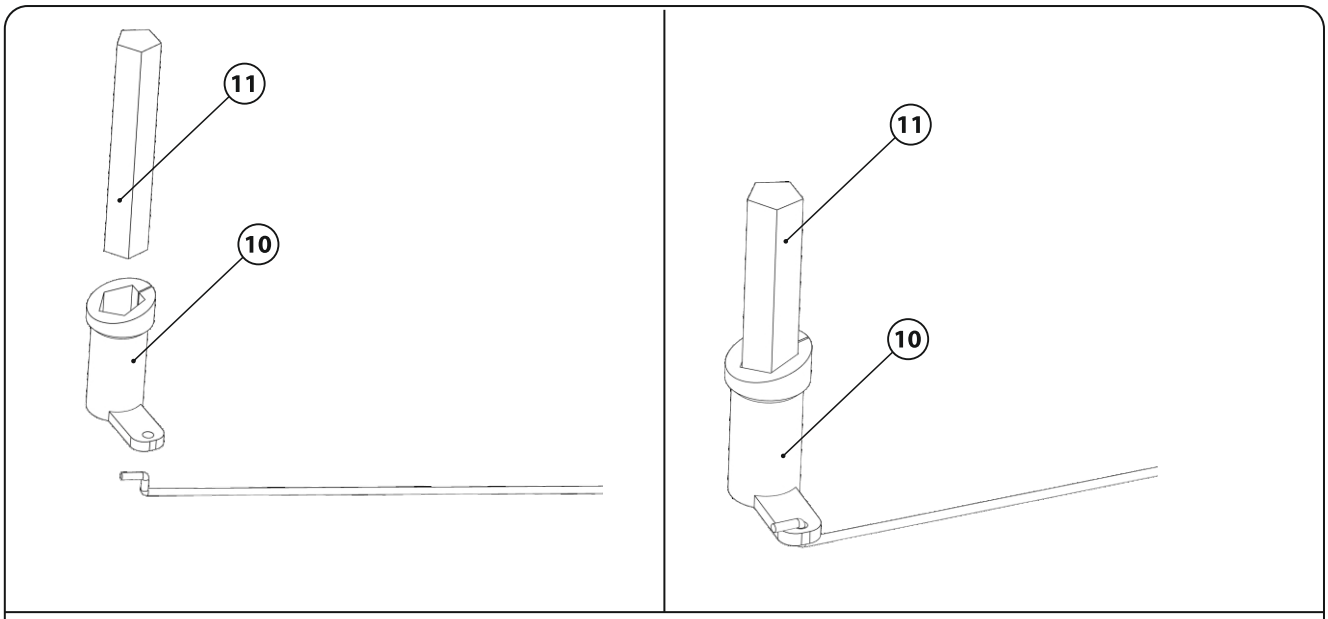

Fin & Rudder: Prepare the rudder axis with parts (10-11). Attach the Bowden cable into part (10).

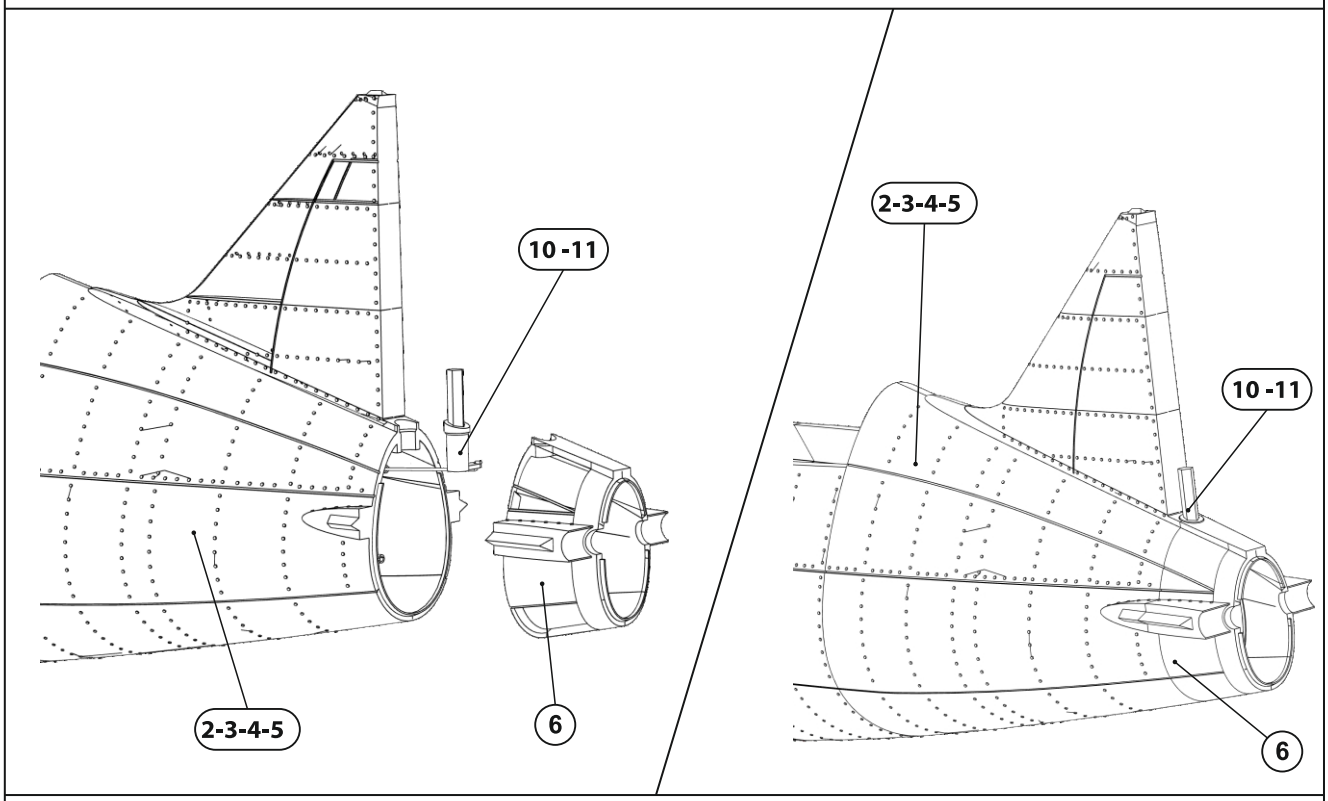

Fin & Rudder: Attach the glued parts (10-11) to part (6), ensuring that you thread the Bowden cable through the hole directed towards the servo. Place part (6) without glue and make sure it can rotate freely. If necessary, clean with sandpaper. If everything fits, glue part (6) to part (5), but be careful not to let the glue get into the part where the rudder axis rotates.

ELEVATORS

Assembly Taiplane & Elevetors

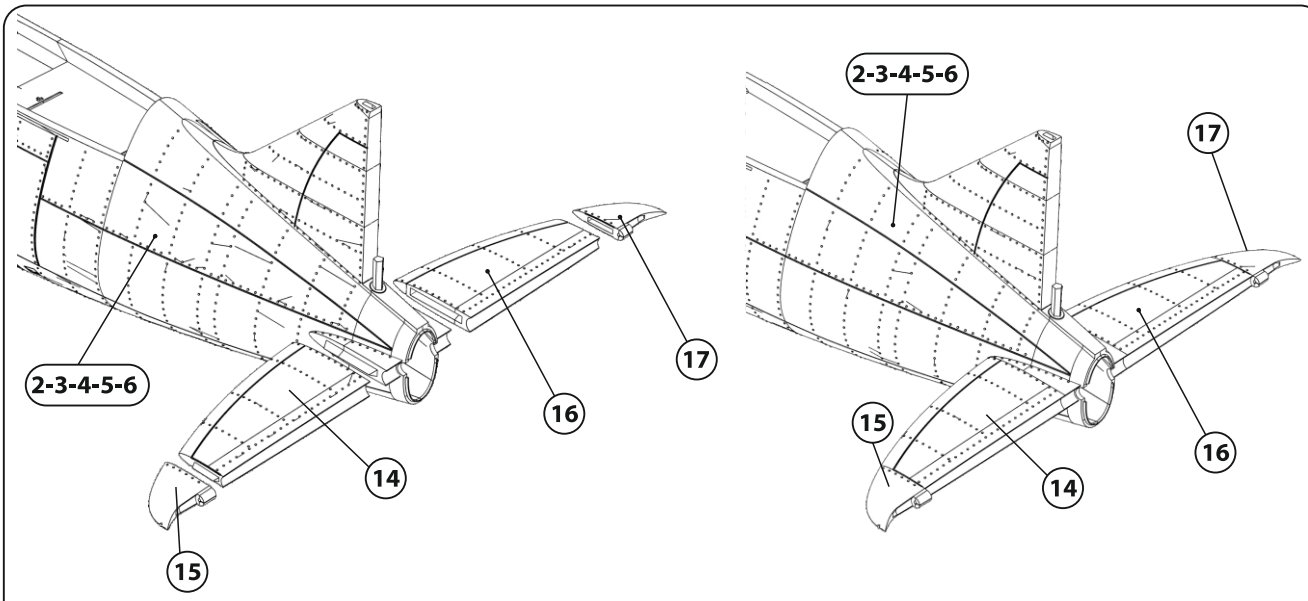

Tailplane: Glue parts (15-16) together and attach them to the fuselage (2-3-4-5-6). Repeat the same process with parts (16-17).

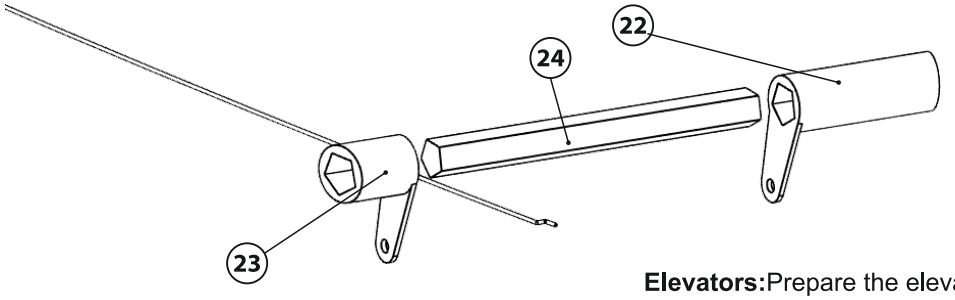

Elevators: Prepare the elevator axis parts (23-24-25) and the elevator Bowden cable.

Elevators: Glue them together as one unit and attach the elevator Bowden cable to the elevator lever..
.

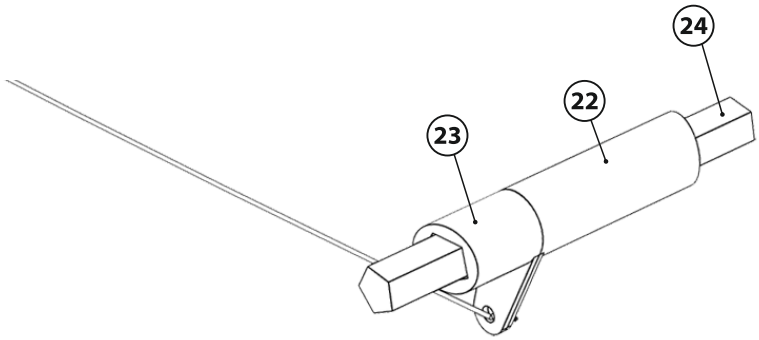

ELEVATORS

Assembly Moving Parts Elevetors

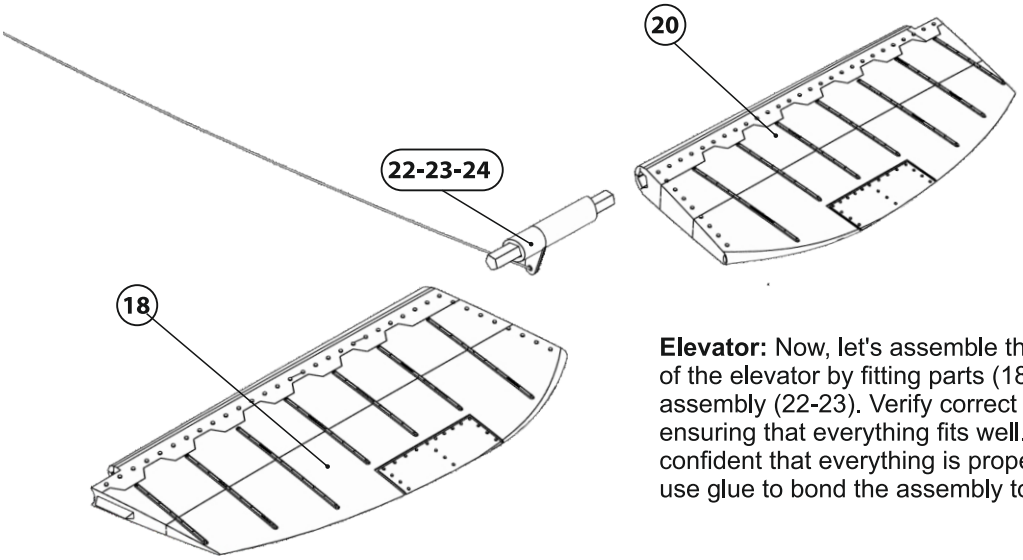

Elevator: Now, let's assemble the movable part of the elevator by fitting parts (18-19) onto the assembly (22-23). Verify correct alignment by ensuring that everything fits well. If you're confident that everything is properly aligned, use glue to bond the assembly together.

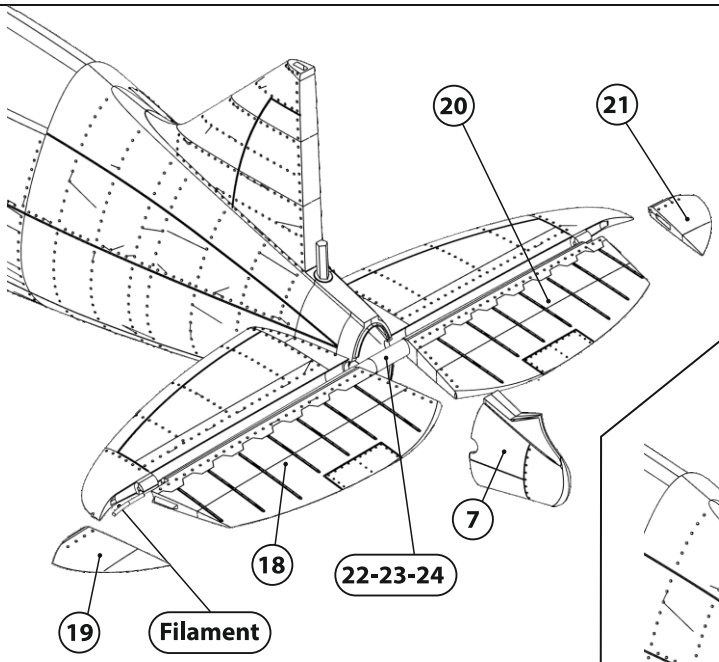

Elevator: Thread the assembly (18-20-22-23-24) with the Bowden cable into the opening leading to the elevator servo. Seal it all with part number (7) to prevent glue from reaching the moving parts of the elevator. Use a piece of filament at the ends as the elevator axis.

.

Elevator: Complete the elevator assembly by gluing the ends of the movable part of the elevator (19-21).

.

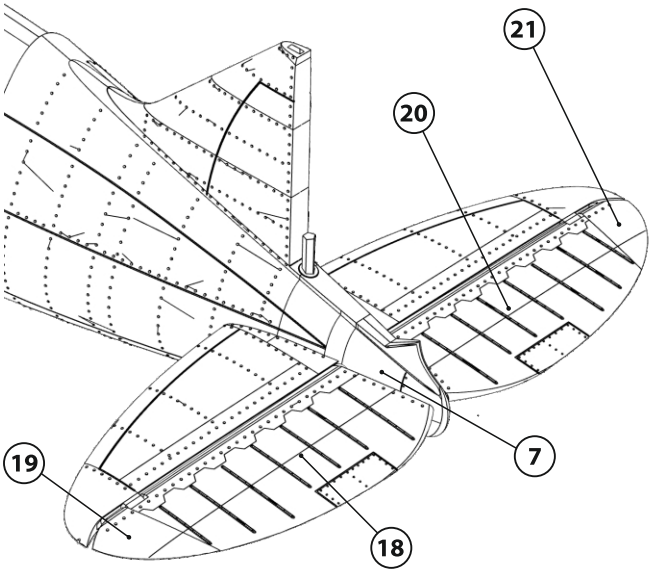

RUDDER

Fin & Rudder

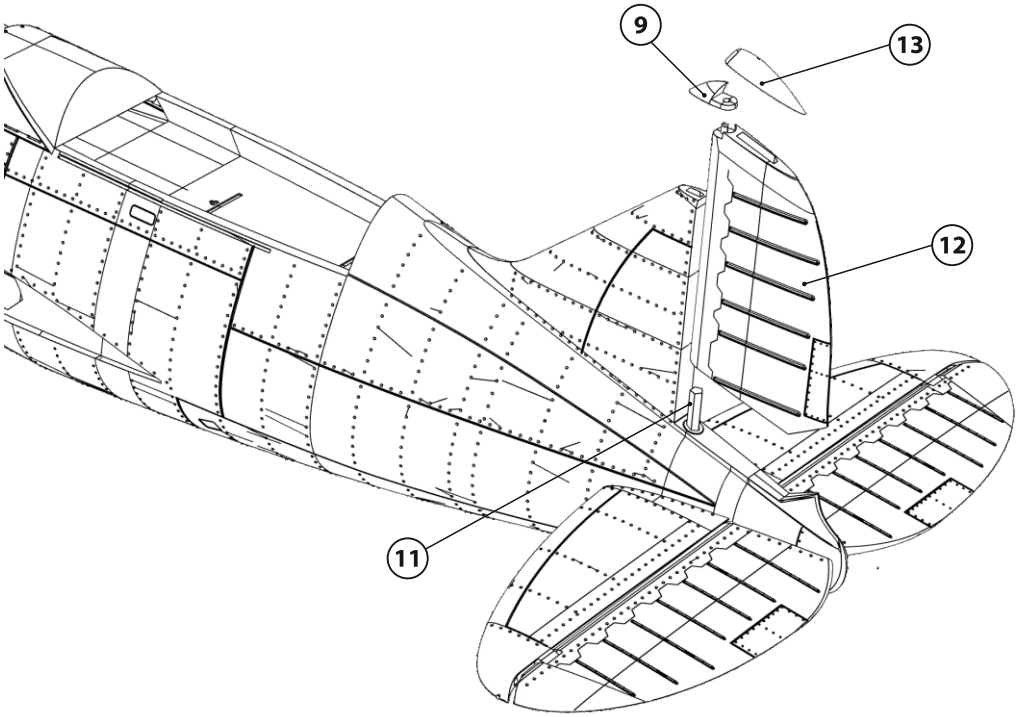

Rudder: To complete the rudder assembly, start by fitting part (12) onto the hex (11). In this step, you must be careful to ensure that the rudder lever is in the correct position, which you can verify by looking into the fuselage from the cockpit or ensuring that part (10) aligns with the fuselage surface. If everything fits well, use glue carefully to avoid compromising the mobility of the rudder axis. Attach the upper part of the rudder with part (9), which serves as the hinge, and complete the assembly with part (13).

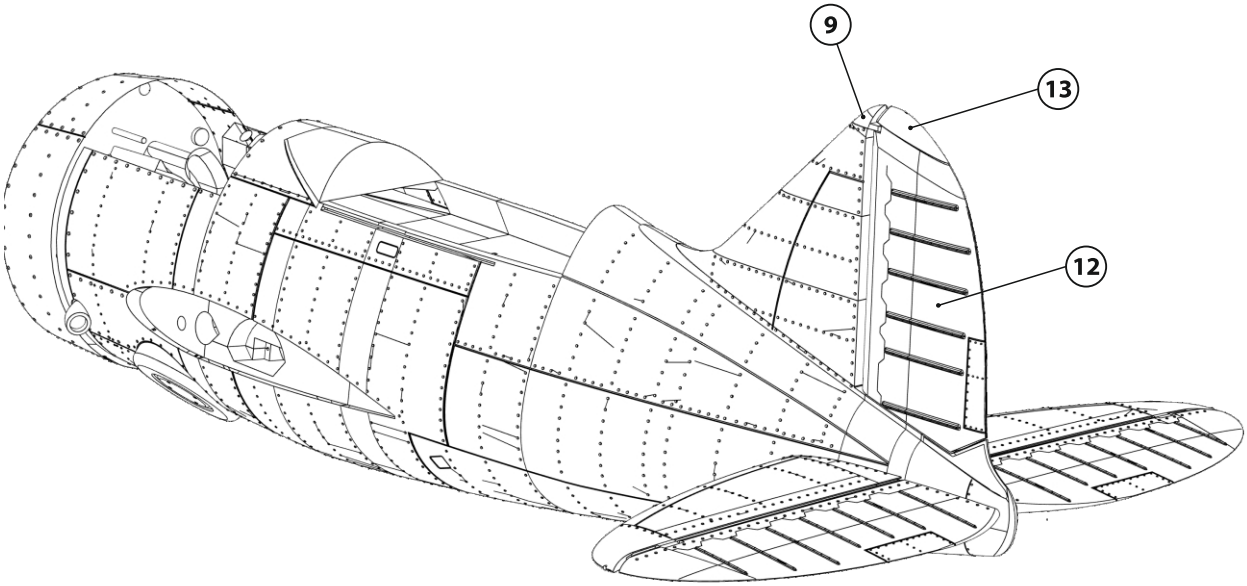

MOTOR HOLDER

Electric Motor Installation

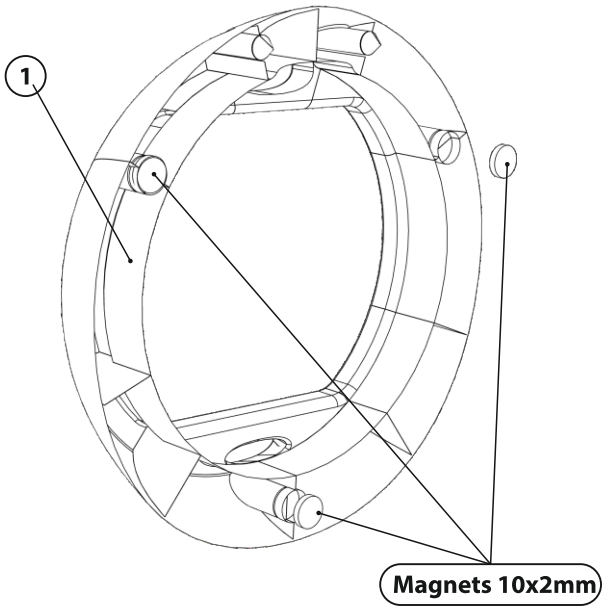

Motor Cover: Before starting with the installation of the electric motor, clean part (1) from any filament residues and embed three 10x2mm magnets into it.

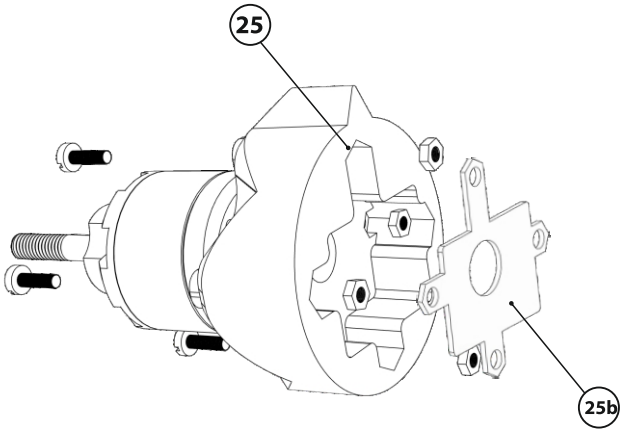

Electric motor holder installation: First, insert the M3 nuts into the motor mount (25) and then glue part (25b) over them to secure them in place.

Position the electric motor on part (25) so that the cables, when viewed from the front, point to the left and upwards (they will later be threaded through an opening in the fuselage), and secure it using M3

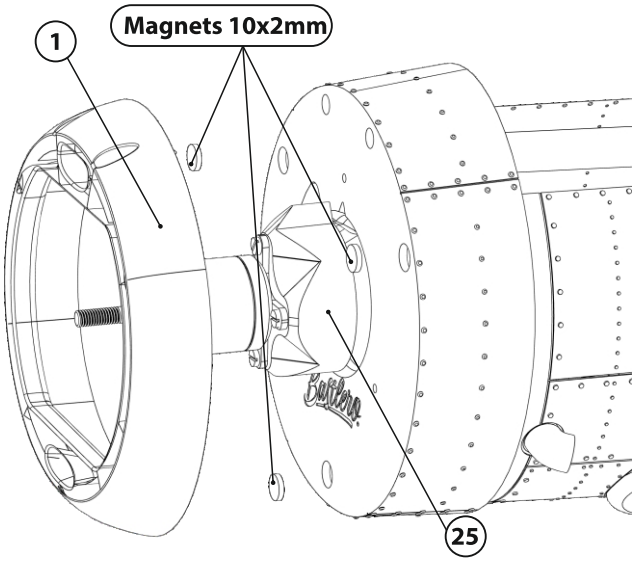

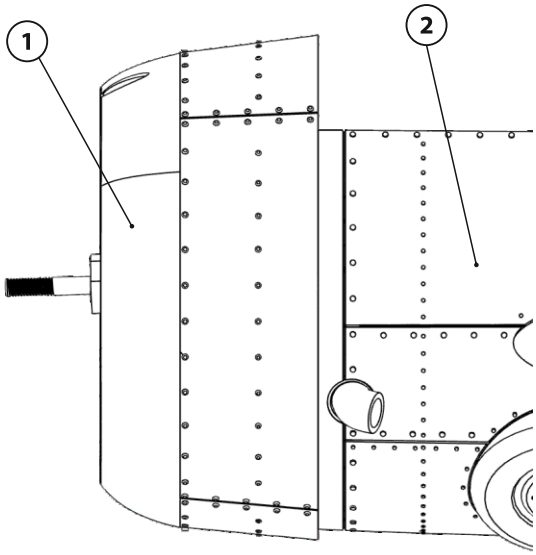

Electric motor holder installation: Embed 3x 10x2mm magnets into the fuselage section (ensure that the magnetic poles are aligned correctly with part 1). In the next step, insert the motor along with its motor mount into the fuselage so that when you attach part 1, the propeller hub protrudes slightly (you can also verify this by fitting the propeller to ensure it doesn't rub against the motor housing). If everything is in order, secure it with glue.

BATTERY

Battery clip & cover Installation

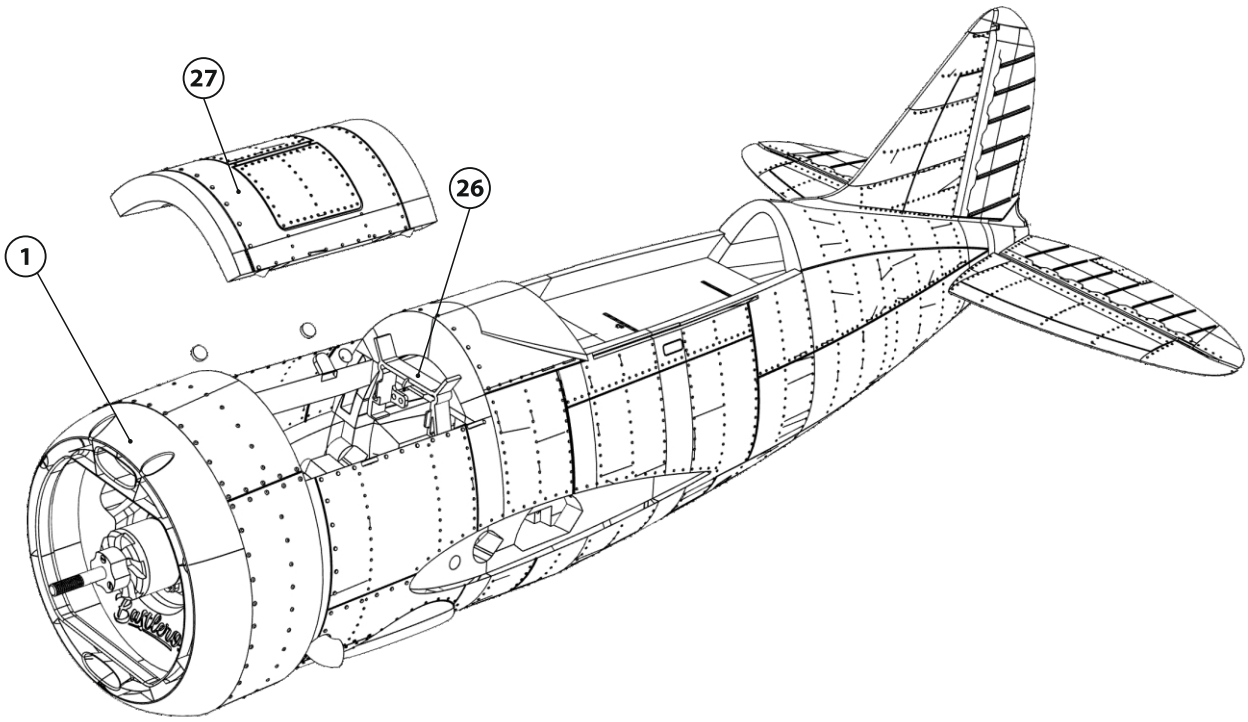

Battery cover installation: Glue 8x2mm magnets into the battery cover (27) and also into the fuselage, ensuring the magnetic poles are aligned correctly. Now, snap on the battery clip (26), which is adjustable on the rail and can be moved to easily correct the aircraft's center of gravity by shifting the battery position.

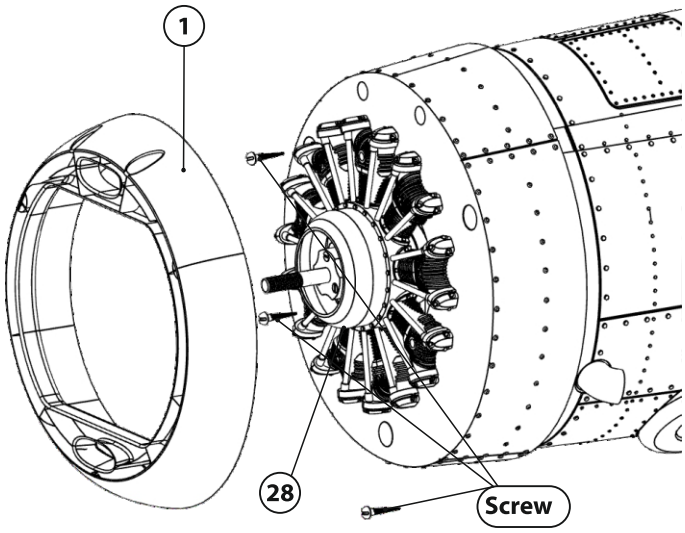

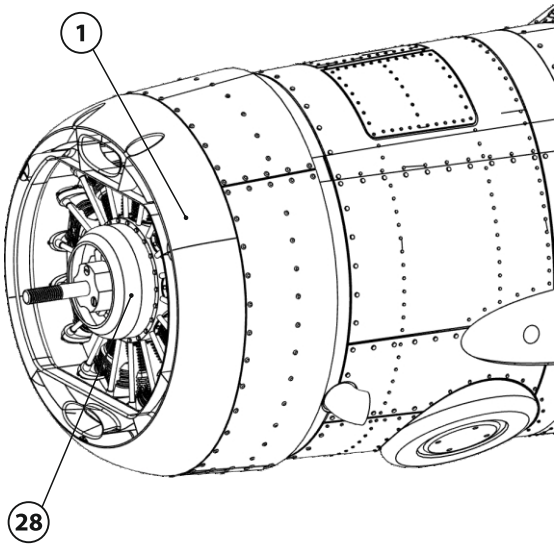

Tail Gear: Now attach the mock engine part (28) using 3 screws.
Note: Ensure that the electric motor rotates freely and does not rub against the mock engine part.

COCKPIT

Instruments Panels Installation

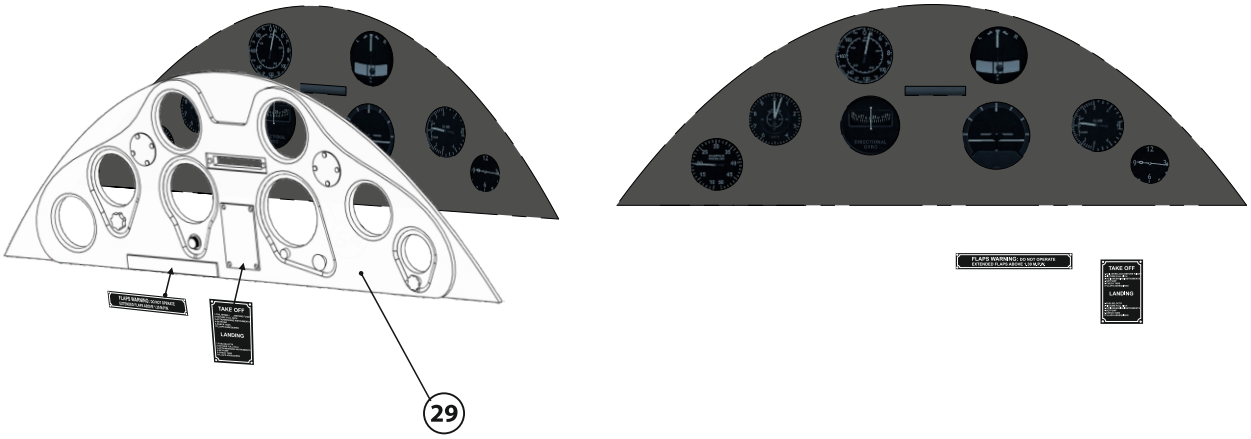

Dashboard: The dashboard (29) goes under the printed and cut-out image of the instrument panel, along with the description printed from the laser printer.

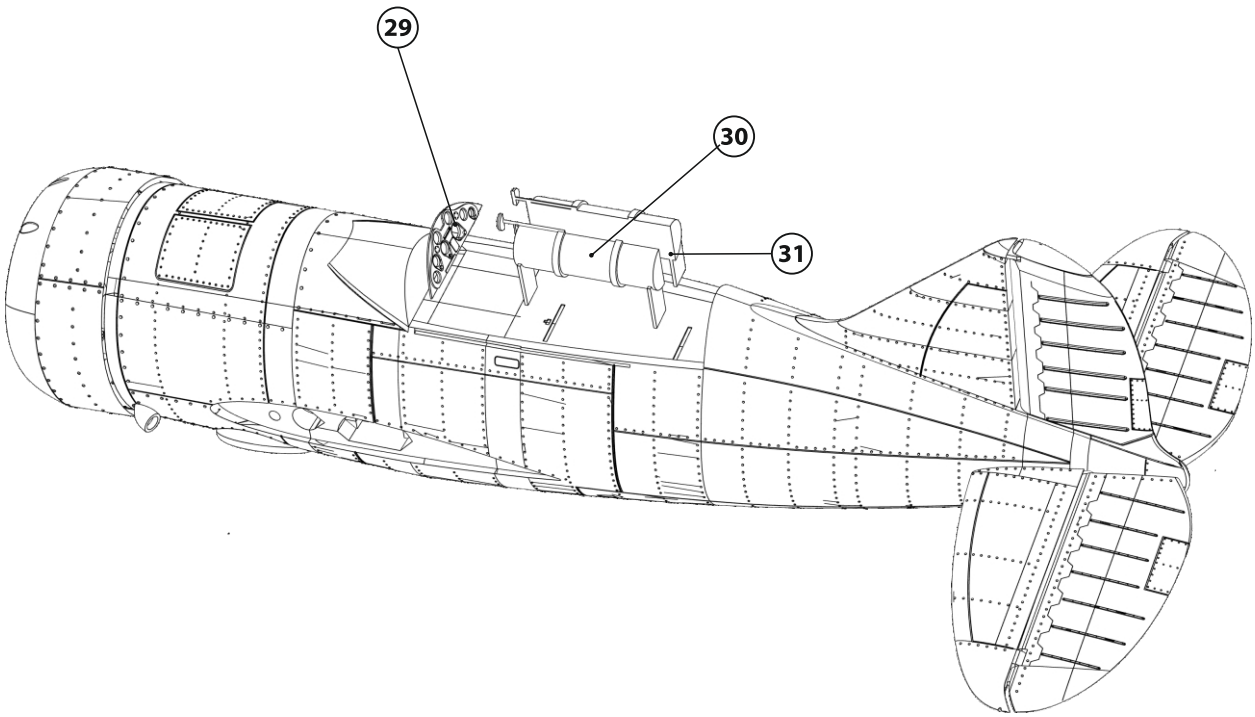

Dashboard: Glue the instrument panel (29) to the fuselage of the aircraft and assemble the parts of the emergency equipment compartment (30-31). Then glue them into the cockpit.

COCKPIT

Bubble Canopy

Canopy: To properly proceed with making the canopy glass, you can refer to the method used in constructing the F2A canopy.

Video instruction

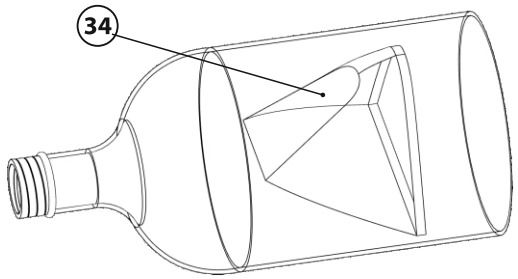

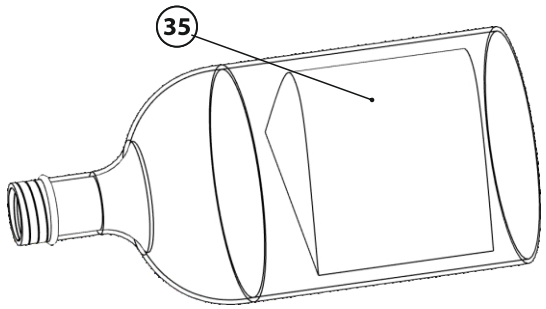

Canopy: If you choose to make your own, print the parts (34-35-36) using PET material and place them inside a PET soda bottle. Fill the space between the mold and the bottle with, for example, old fabric, and then carefully heat them using a heat gun. The top of the bottle will shrink, creating a beautiful striped glass for your canopy.
Note: If you do not plan to make the canopy, use parts (31_glass-32_glass-33_glass).

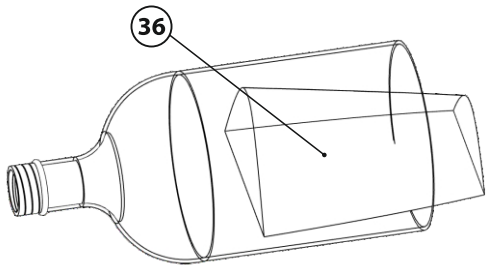

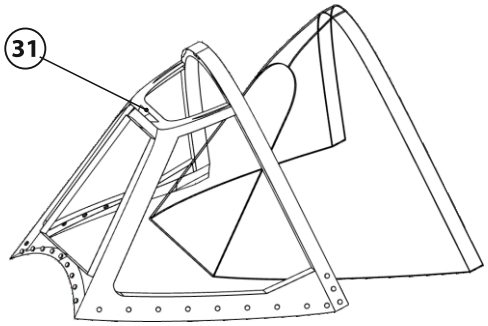

Canopy: cut plexiglass from the moulds (34) and glue into the frame (31)

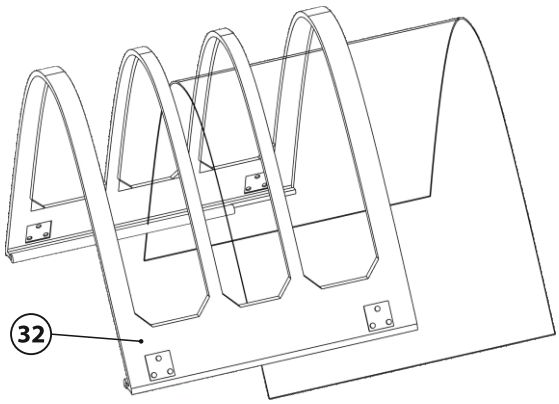

Canopy: cut plexiglass from the moulds (35) and glue into the frame (32)

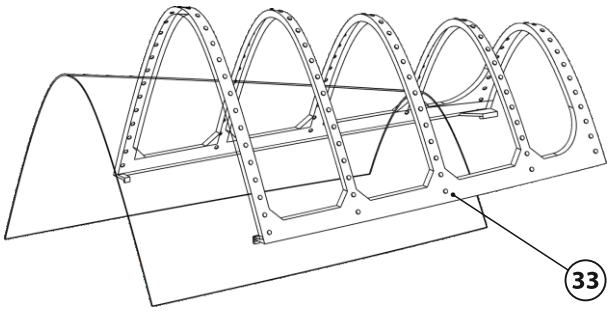

Canopy: cut plexiglass from the moulds (36) and glue into the frame (33)

COCKPIT & SERVOS

Canopy & Servo Installation

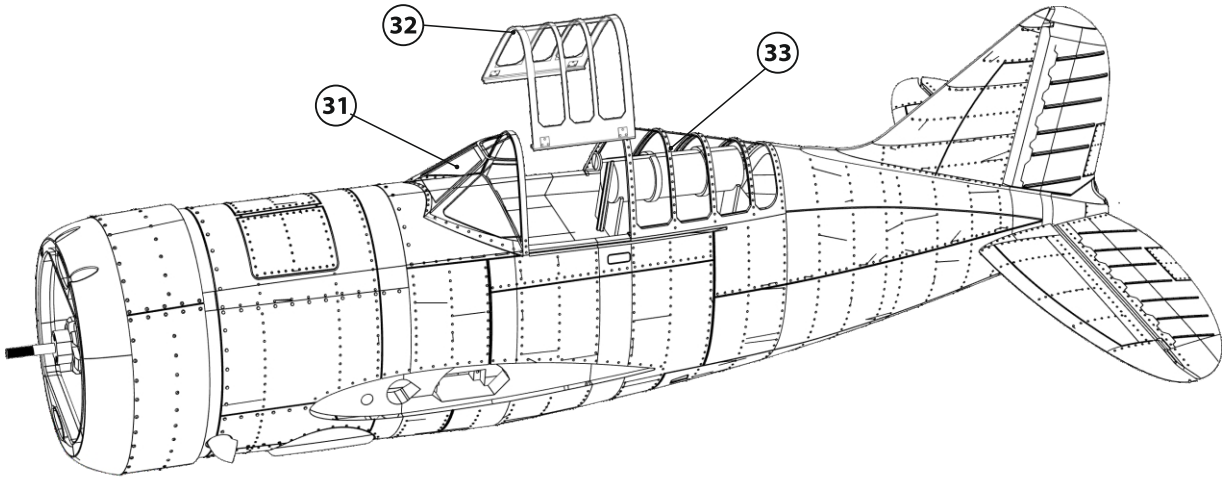

Canopy: Glue the cockpit parts (33-34) to the fuselage of the aircraft. When attaching part (32), do not use glue; it should snap into the groove (which you should clean thoroughly beforehand). This part of the canopy should be movable and able to open or close the cockpit.

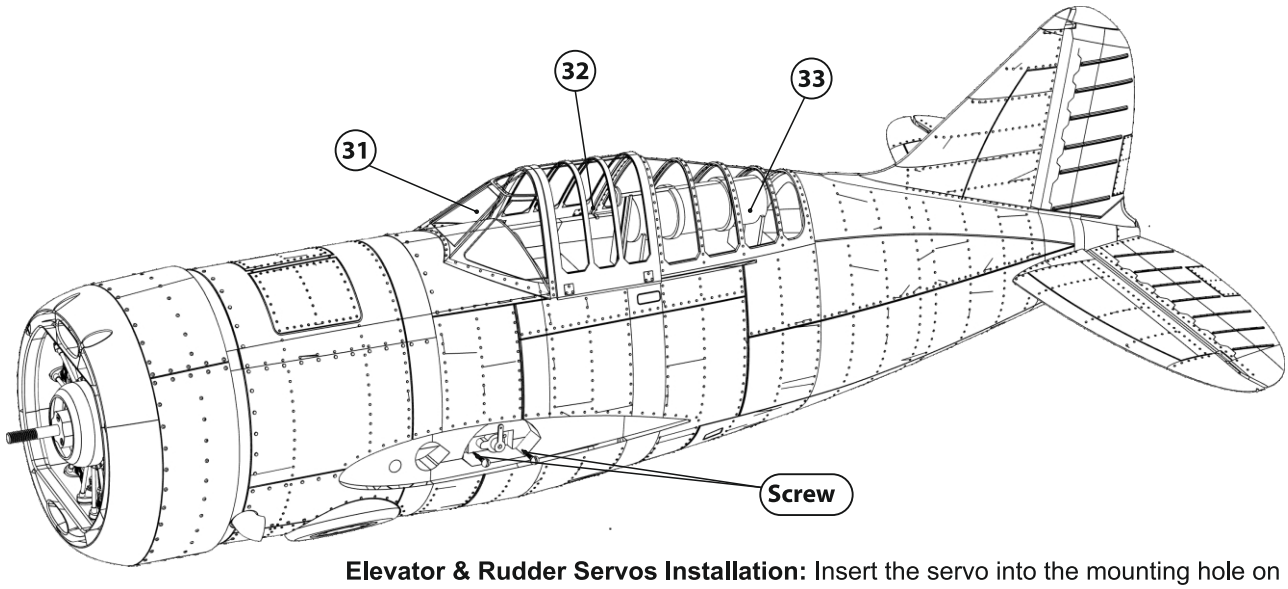

Elevator & Rudder Servos Installation: Insert the servo into the mounting hole on the side of the fuselage, thread the servo cable inside the fuselage, and secure the servo with two screws. Then, connect the control Bowden rod from the elevator. Repeat the entire process on the other side for the rudder servo of the aircraft. Congratulations, you now have the fuselage of the F2A airplane fully completed.

WING

Wing Assembly

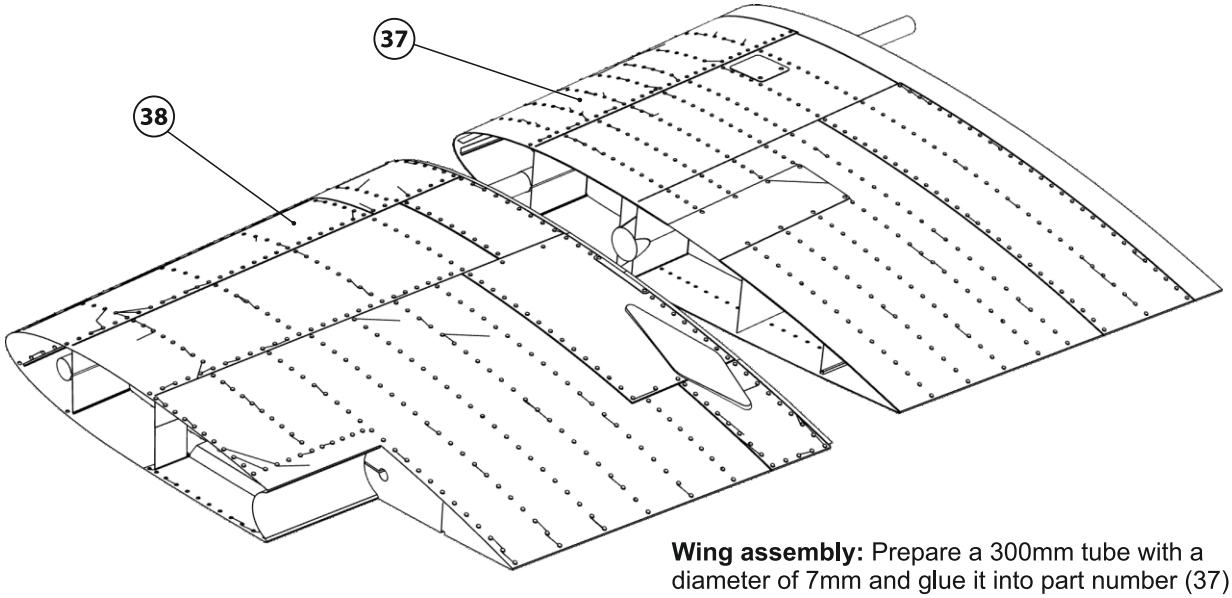

Wing assembly: Prepare a 300mm tube with a diameter of 7mm and glue it into part number (37) so that it protrudes 57mm towards the fuselage. Continue with part (38), which you will place onto the tube and connect with part (37).

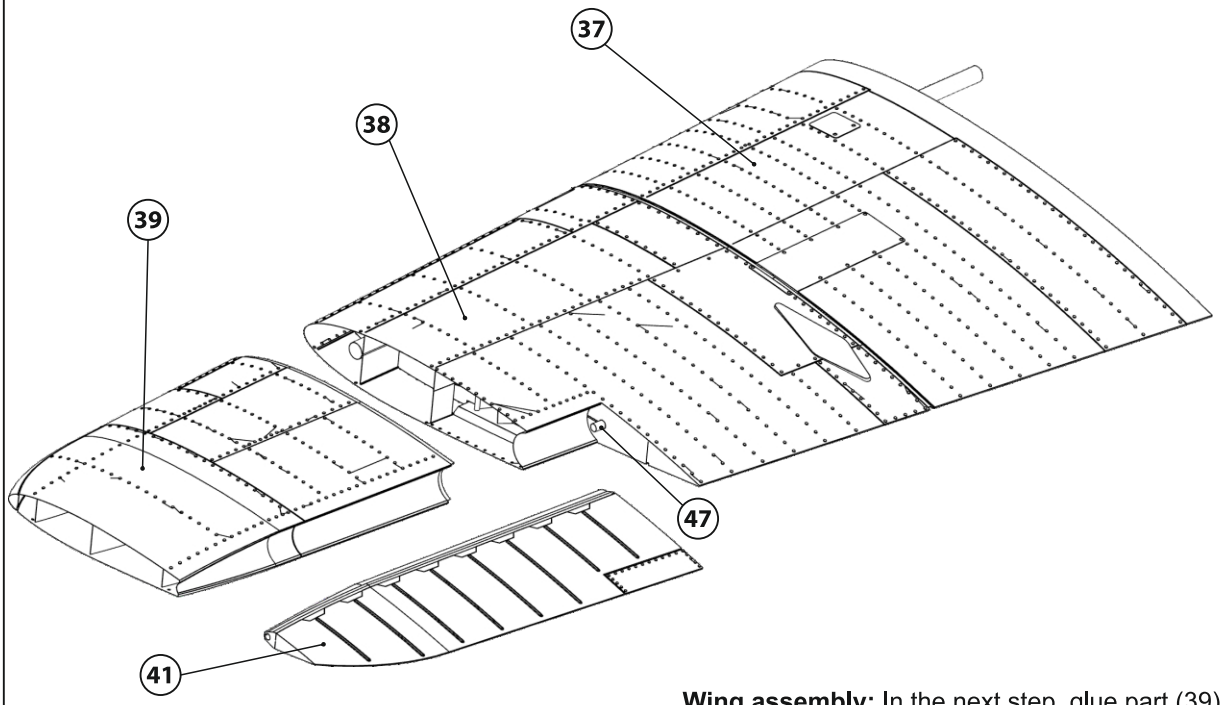

Wing assembly: In the next step, glue part (39) and the aileron shaft (47), onto which you will attach the aileron (41).

WING

Wing Assembly - Aileron Servo Installation

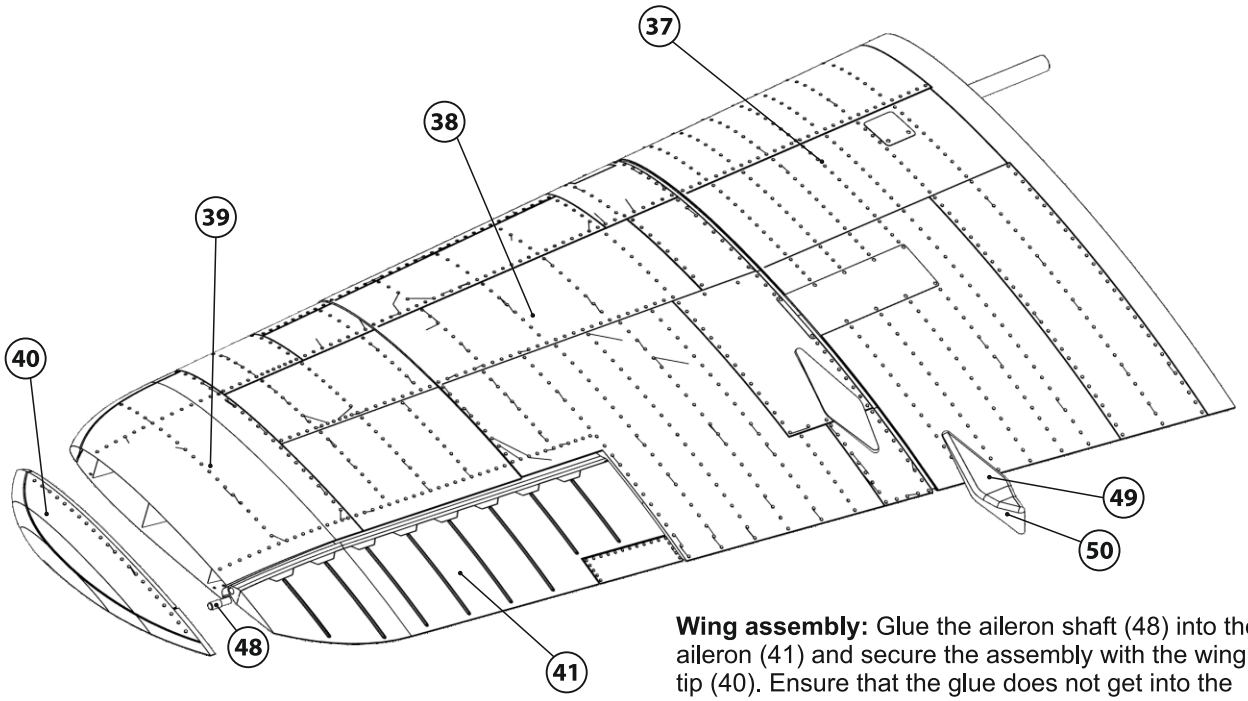

Wing assembly: Glue the aileron shaft (48) into the aileron (41) and secure the assembly with the wing tip (40). Ensure that the glue does not get into the moving parts of the aileron. Finally, glue on part (49).

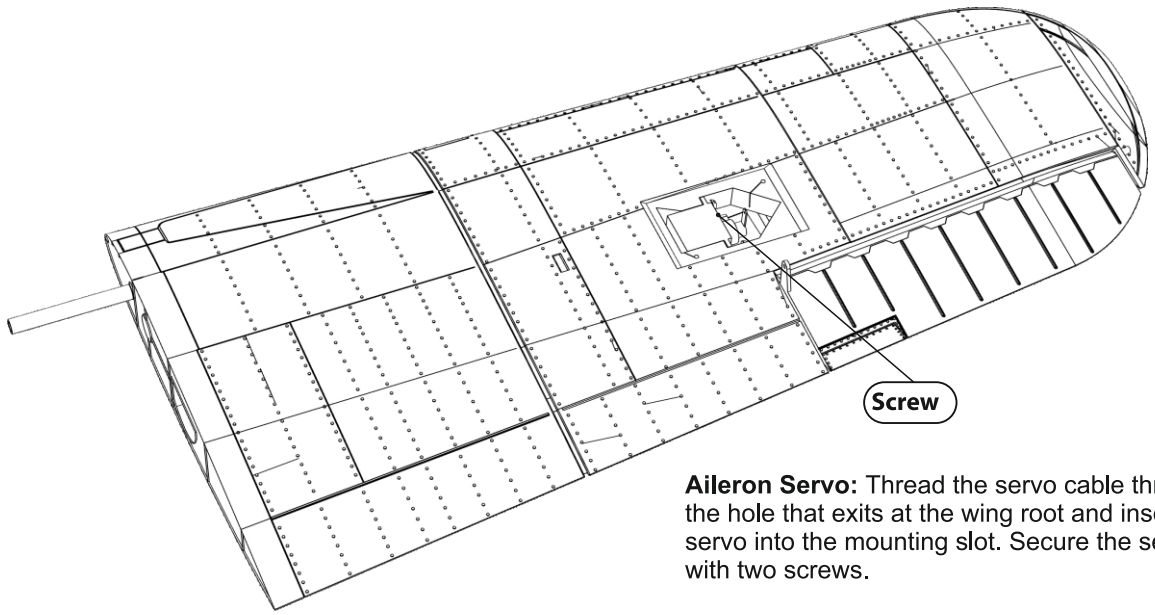

Aileron Servo: Thread the servo cable through the hole that exits at the wing root and insert the servo into the mounting slot. Secure the servo with two screws.

WING

Wing Assembly

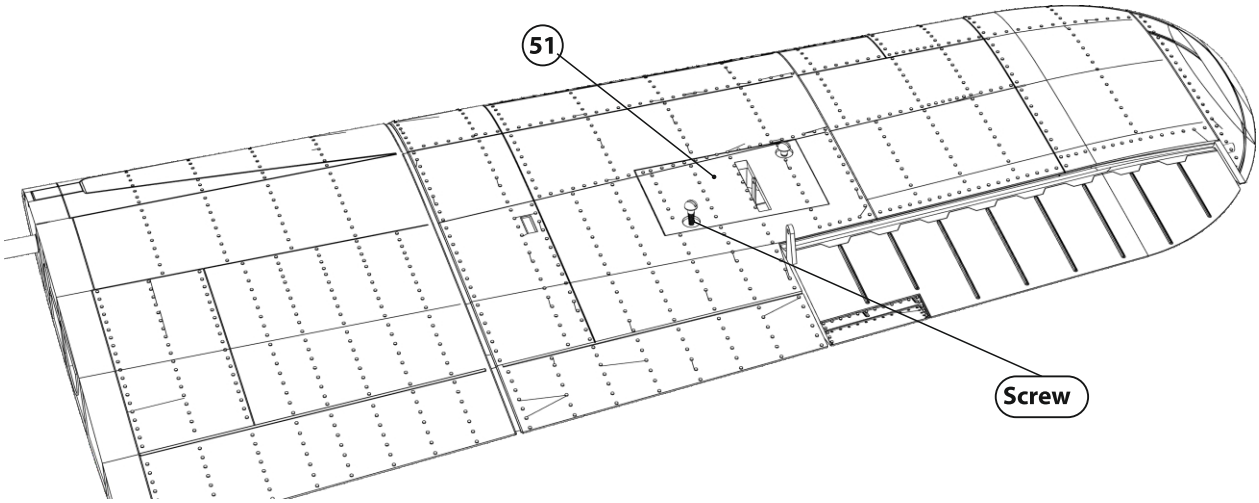

Aileron Servo: Attach the servo cover (51) and secure it with two screws. Now you can connect the servo to the aileron using the pushrod.
Note: Repeat the same procedure with parts (42-43-44-45-46-47-48-49-50-52) for the right side of the wing.of the wing

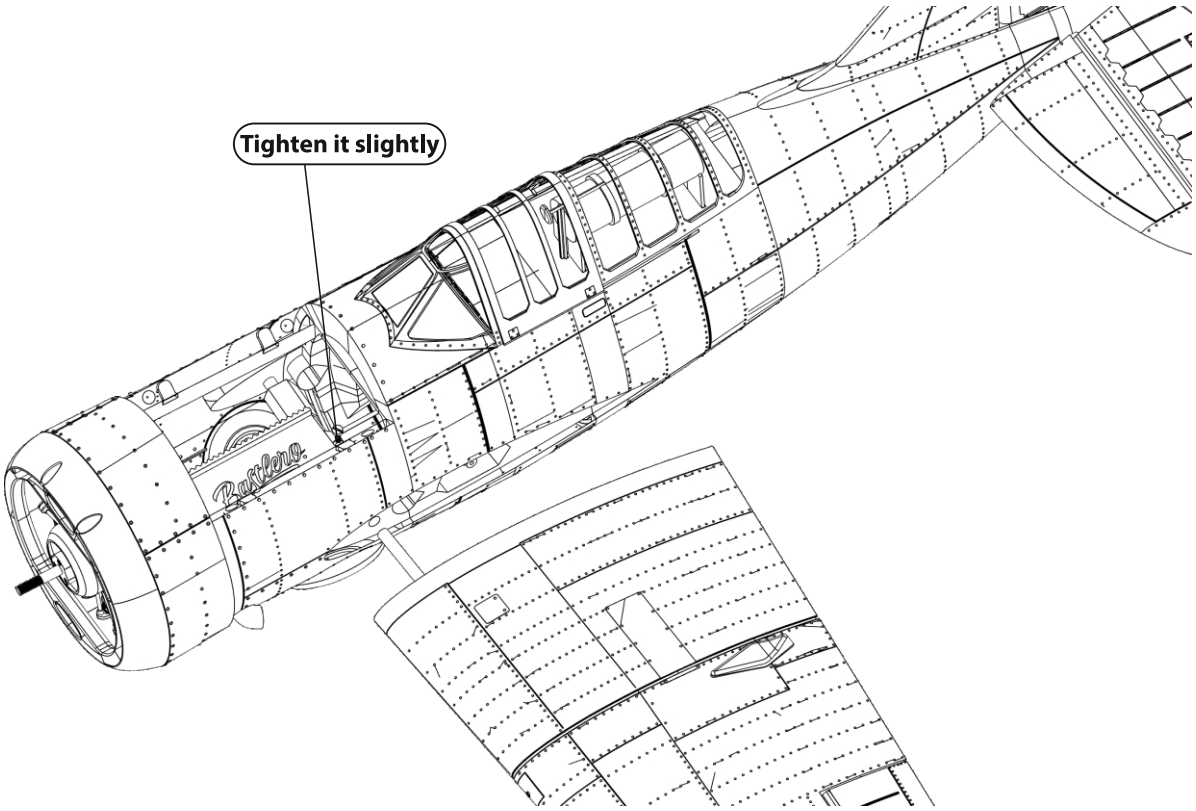

Wing assembly: Insert the entire wing into the fuselage using a 7mm tube, then secure the clamp with a screw. Now the model is ready for flight. Congratulations! You have just completed the construction of the F2A.
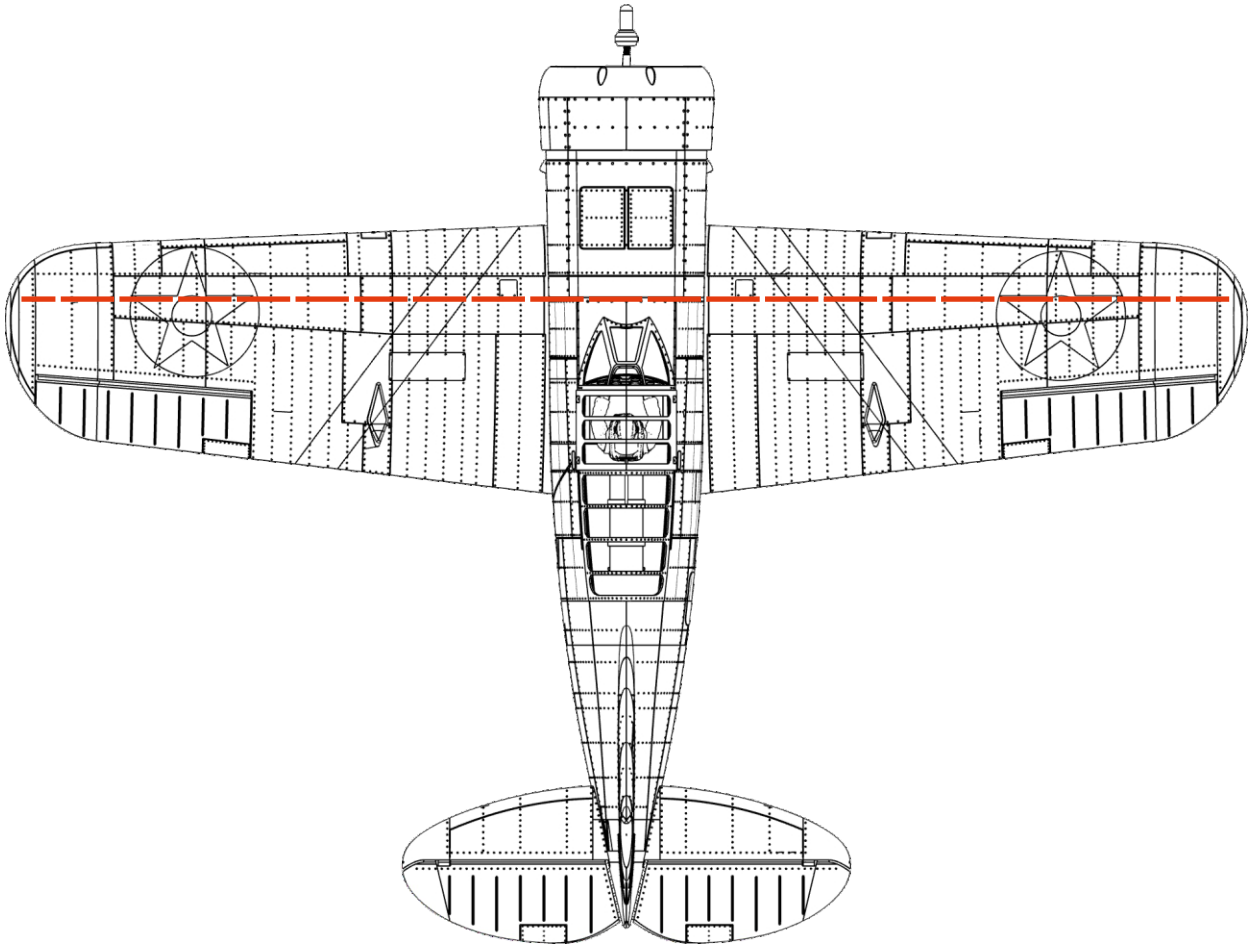
COG
Centre of Gravity